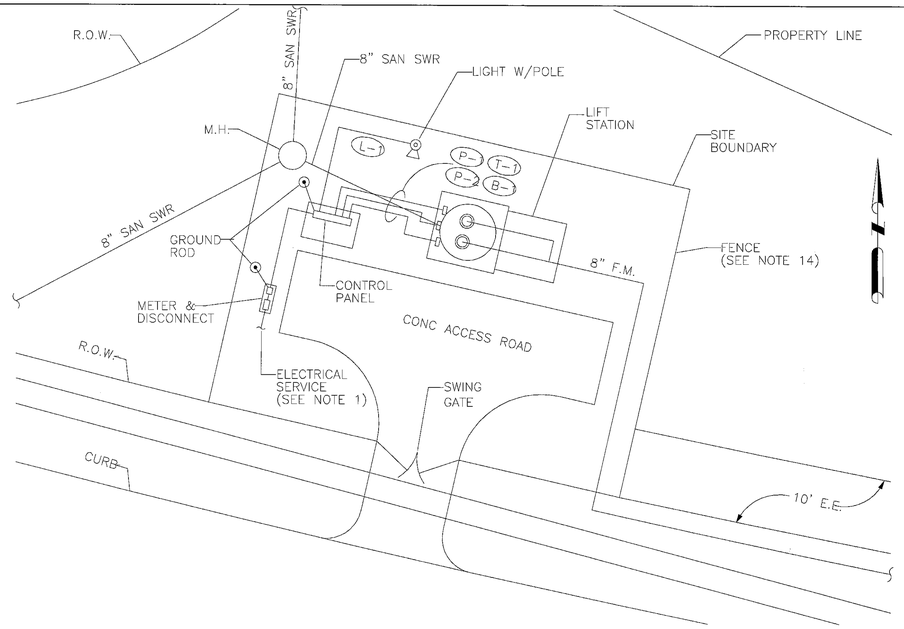

LIFT STATION ELECTRICAL PLAN

CONDUIT AND CABLE SCHEDULE

FEEDER	LOAD	VOLT	CONDUIT	CONDUCTOR	FROM	TO
F1		480V,3ø	2"C	3-2/0, 1-#4 GND. 1-#4 NUET	POWER SERVICE POLE	CONTROL PANEL
P1	3 HP	480V,3ø	2" C	3-#6, 2-#10 CTRL, 1-#8 GND. 1#10	CONTROL PANEL	P-1 LIFT PUMP TERMINAL JUNCTION BOX
P1A	3 HP	480V,3ø		**	P-1 LIFT PUMP TERMINAL JUNCTION BOX	P-1 LIFT PUMP
P2	3 HP	480V,3ø	2" C	3-#6, 2-#10 CTRL, 1-#8 GND. 1#10	CONTROL PANEL	P-2 LIFT PUMP TERMINAL JUNCTION BOX
P2A	3 HP	480V,3ø		**	P-2 LIFT PUMP TERMINAL JUNCTION BOX	P-2 LIFT PUMP
L1	150W	120V	3/4 "C	3#12	CONTROL PANEL	LIGHT POLE #1
B1	CONT	--	1 1/2 "C	MANUFACTURER FLOAT CABLES	CONTROL PANEL	FLOAT POINT
T1	CONT	--	1"C	MANUFACTURER TRANSMITTER CABLE	CONTROL PANEL	TRANSDUCER

** CABLE PROVIDED BY PUMP MANUFACTURER.

NOTES:

1. CONTRACTOR TO VERIFY TYPE OF SERVICE (UNDERGROUND OR OVERHEAD) AND SERVICE VOLTAGE.
2. SURGE SUPPRESSER – LIGHTNING PROTECTION CORPORATION MODEL #LPC31765 – 8, 480V, 3 PHASE, 4 WIRE (FOR OUTDOOR INSTALLATION).
3. ALL SERVICE ENTRANCE WIRING AND PANEL FEEDS SHALL BE STRANDED COPPER CONDUCTOR WITH "XHHW" INSULATION.
4. ALL ABOVE GROUND CONDUIT SHALL BE RIGID HOT DIP GALVANIZED, EXCEPT AS NOTED.
5. ADJUST MCP FOR MOTOR LOAD.
6. VERIFY PUMP PROTECTION CONDUCTOR REQUIREMENTS, FURNISH ACCORDINGLY. IF PUMP IS SUPPLIED WITH SEPARATE CABLE FOR PROTECTION CKTS., THEN PROVIDE ADDITIONAL CONDUIT INTO CONTROL PANEL.
7. ALL UNISTRUT TO BE STAINLESS STEEL.
8. ALL NEMA 3R, GASKETED S.S. ENCLOSURES TO HAVE LOCKABLE HANDLE AND 3 POINT LATCHING.
9. SEAL PUMP CABLE CONDUITS FROM LIFT STATION WITH CSBE SEALS AND CABLE CONDUITS WITH DUCT SEAL INSIDE CONTROL PANEL.
10. OUTDOOR LIGHT SHALL BE 250W METAHALID
11. INSTALL JUNCTION BOXES AT WET WELL TOP TO MINIMIZE CONDUIT AND PROVIDE EASE IN CABLE REMOVAL.
12. PROVIDE CONTROL PANEL WITH US FILTER D-152 LEVEL CONTROLLER AND US FILTER A-1000 TRANSDUCER.
13. PROVIDE AUDODILAR.
14. GROUND FENCE PER NEC STANDARDS.

480 VOLT LOAD ANALYSIS, 3 PHASE (SEE NOTE 1).

	A	B	C	N
2 – FLYGT 20 H.P. PUMP MOTORS (FUTURE) @ 26 AMPS EA. =	52	52	52	0.0 AMPS
1 – 40 AMP LIGHTING PANEL =	40	0	40	40.0 AMPS
25% OF LARGEST MOTOR APPROX. =	7	7	7	0.0 AMPS
TOTAL =	99	59	99	40.0 AMPS

USE 150 AMP MAIN BREAKER
USE 150 AMP MAIN DISCONNECT

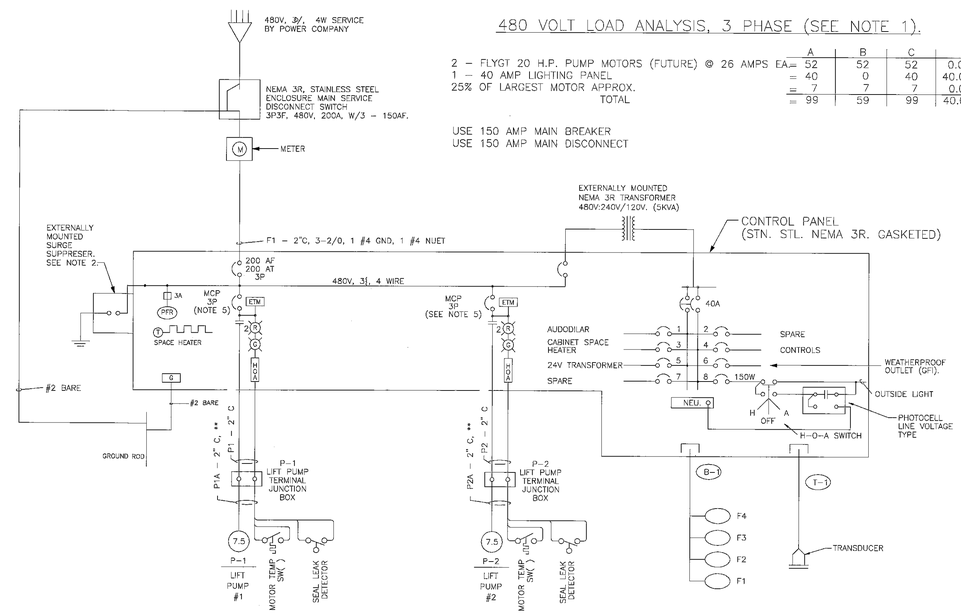

ONE LINE DIAGRAM

N.T.S.

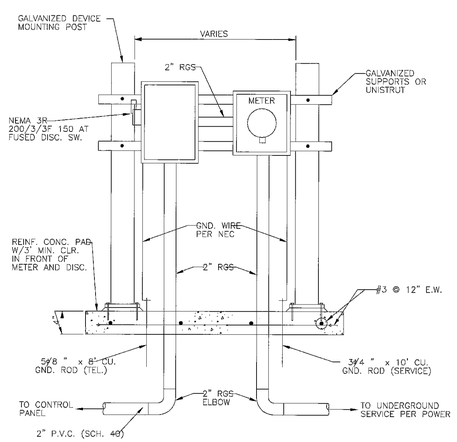

SERVICE EQUIPMENT DETAIL

N.T.S.

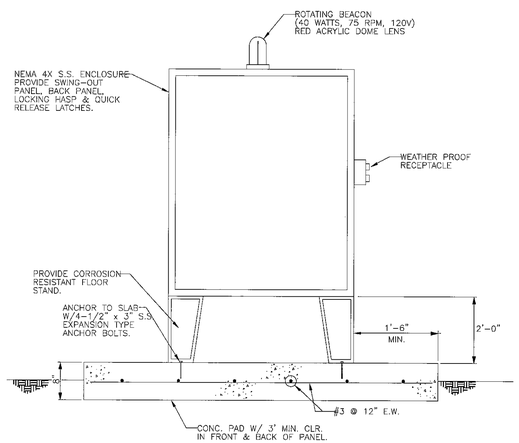

CONTROL PANEL DETAIL

N.T.S.

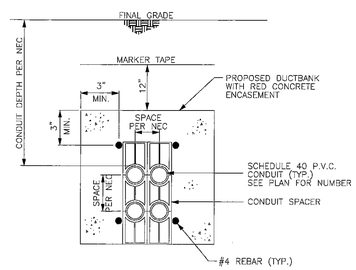

DUCTBANK CONSTRUCTION DETAIL

N.T.S.

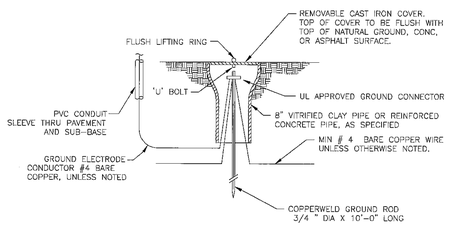

GROUND ROD DETAIL

N.T.S.

STATE OF TEXAS
J. T. McWHORTER
37272
REGISTERED
PROFESSIONAL ENGINEER

NOTE:
LIFT STATION DETAILS ARE PROVIDED AS AN EXAMPLE OF THE TYPE OF MATERIAL AND CONSTRUCTION REQUIRED. PROPOSED LIFT STATION MUST BE DESIGNED BY THE PROJECT ENGINEER AND APPROVED BY THE CITY ENGINEER PRIOR TO CONSTRUCTION

CITY OF TEXAS CITY

Texas City All-America City 1997

LIFT STATION DETAIL #2

Texas City by the Bay

PUBLIC WORKS DEPARTMENT		
DRAWN: D. REEVES/ T. MARIS	DATE: 08/01/05	DWG. NO.
SCALE: N/A	REV. NO.	6 OF 6

(GISSTATION) C:\DRAWING\SUBDETAIL\LIFT STATION ELEC DETAIL.DWG